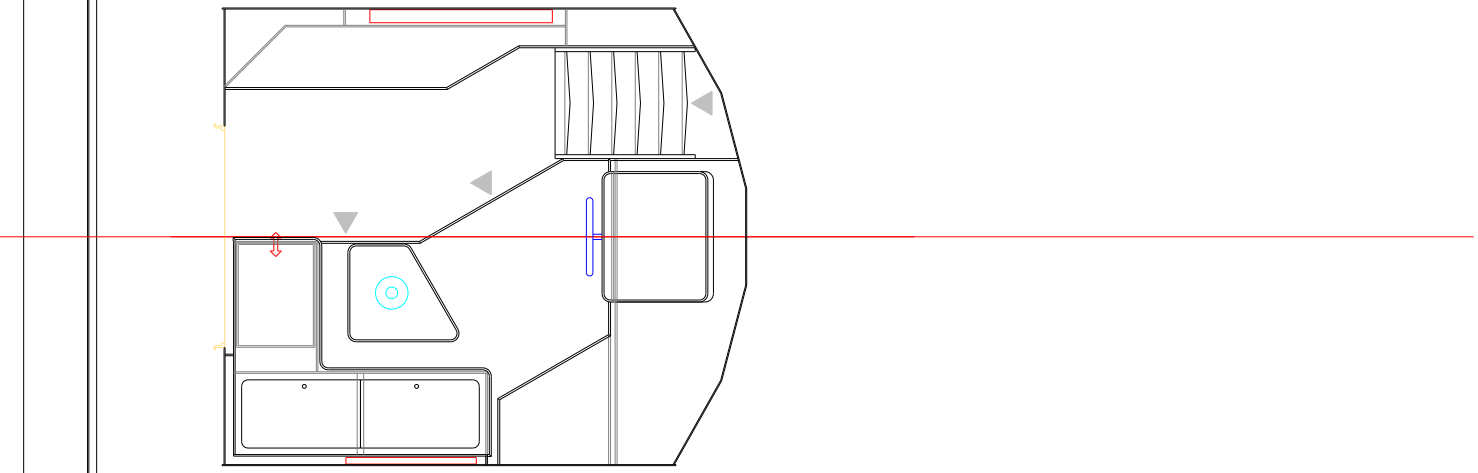

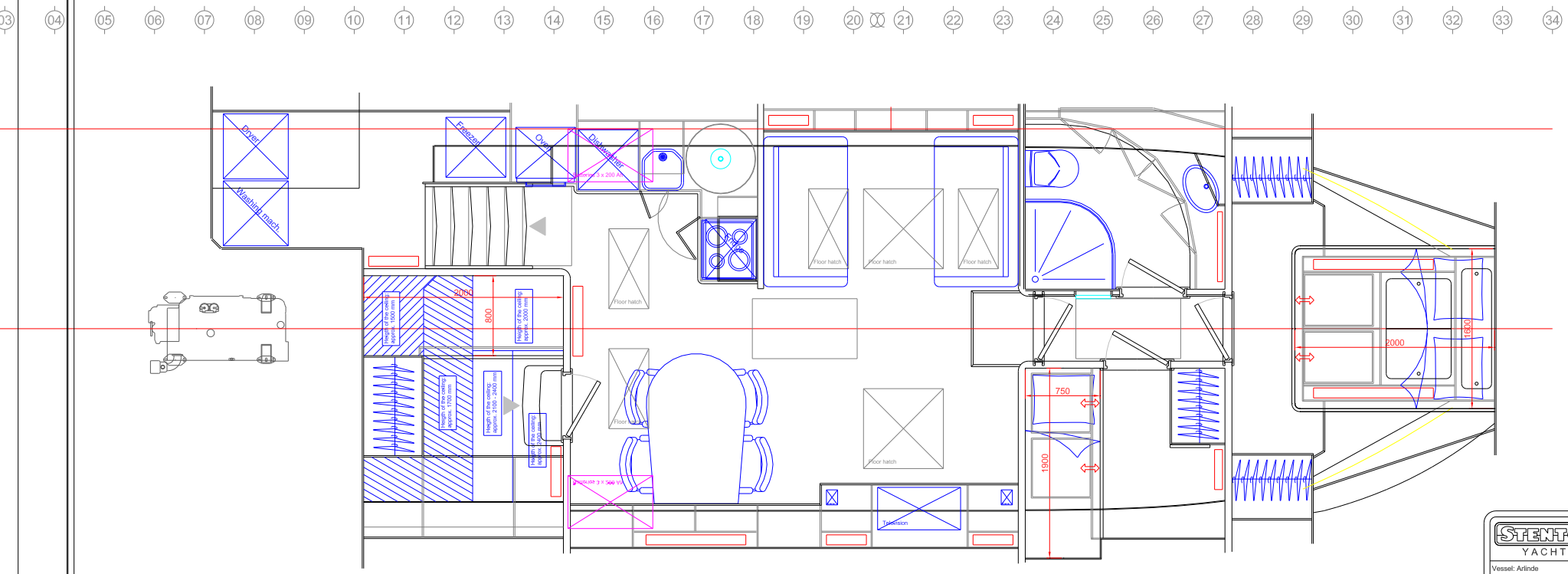

STENTOR YACHTS

Vessel: Arlinde	
Subject: Lay out interior	
Drawing version: 1.1	Scale: 1 : 20
Date: 9-12-2005	Format: A1